PREPARED BY :	REVIEWED BY :	APPROVED BY :
RIKI DEPANO **(ENGINEERING SUPERVISOR)**	**PURNO BUDI KISWANTO** **(ENGINEERING MANAGER)**	**HAPPY MONDA PINTAULI** **(QA MANAGER)**

1. TUJUAN

PURPOSE

Memberikan petunjuk tentang pengoperasian dan perawatan terhadap sistem udara tekan Ingersoll Rand IRN37 OF-A10, sistem udara tekan Atlas Copco ZT37KW, Refrigerator Dryer, Desiccant Dryer dan Atlas Copco Dryer CD 130+ - 70 agar sesuai dengan standar yang ada di PT Etana Biotechnologies Indonesia.

Provide instructions on the operation and maintenance of the Ingersoll Rand IRN37 OF-A10, Atlas Copco ZT37KW, Refrigerator Dryer, Desiccant Dryer and Atlas Copco Dryer CD 130+ - 70 compressed air system, to confirm with standard in PT. Etana Biotechnologies Indonesia

2. RUANG LINGKUP

SCOPE

SOP ini digunakan oleh departemen Engineering khususnya teknisi Utility sebagai pedoman dalam melakukan pengoperasian dan perawatan terhadap sistem udara tekan.

This SOP is used by engineering department especially utility technician as guidance in order to operation and maintenance of compressed air system.

3. TANGGUNG JAWAB

RESPONSIBILITY

3.1. Teknisi engineering bertanggung jawab :

Engineering Technician are responsible :

3.1.1. Melakukan perawatan harian seperti : membersihkan badan mesin setiap saat sehingga tidak berkarat dan permukaan mesin tetap baik, membersihkan ruangan (lantai dan dinding).

Conduct daily maintenance like : clean the body of machine at any time so it doesn't rust and the engine surface remains good, cleaning the room (floor and wall).

3.1.2. Mengoperasikan sistem udara tekan sesuai dengan kebutuhan.
Operate compressed air system as needed.

3.1.3. Melakukan pemantauan harian terhadap sistem udara tekan.
Perform daily monitoring of compressed air system.

3.1.4. Melakukan perawatan sesuai jadwal yang telah ditetapkan.
Perform maintenance according to a predefined schedule.

3.2. Supervisor Engineering bertanggung jawab :
Engineering Supervisor is responsible :

3.2.1. Membuat jadwal perawatan secara berkala.
Make schedule of maintenance periodically.

3.2.2. Memastikan pelaksanaan perawatan sesuai dengan jadwal.
Ensure implementation of maintenance is according to the schedule.

3.2.3. Memastikan semua alat ukur yang terpasang dan digunakan telah sesuai dengan spesifikasi yang telah ditentukan (dikalibrasi).
Ensure that all measuring instruments installed and used are in accordance with the specifications (calibrated).

3.2.4. Mengkoordinasikan dan melaporkan kepada Manajer Engineering jika terdapat kerusakan pada sistem Udara Tekan.
Coordinate and report to Engineering Manager if there is damage to Compressed Air system.

3.3. Manajer Engineering bertanggung jawab :
Engineering Manager responsible :

3.3.1. Menentukan *spare parts* pengganti apabila *spare parts* yang sesuai sudah tidak dijual lagi.
Determine the replacement spare parts spare parts if suitable spare parts are no longer sold.

3.3.2. Memutuskan dan mengkoordinir tindakan yang diperlukan apabila perlu dilakukannya penggantian, modifikasi peralatan, perubahan sistem udara tekan dan menyiapkan prosedur perubahan.
Decide and coordinate action required if necessary replacement equipment modification, change of compressed air system and prepared change control.

4. DEFINISI

DEFINITION

Sistem udara tekan adalah sistem yang mejaga kualitas udara yang dijaga dengan tekanan yang lebih besar dari tekanan atmosfer.

Compressed air system is a system that maintains air quality which is maintained with a pressure greater than atmospheric pressure

5. PETUNJUK UMUM

GENERAL INSTRUCTION

5.1. Udara tekan yang digunakan di PT Etana Biotechnologies Indonesia terbagi dalam 2 jenis, yaitu kontak produk, yang digunakan untuk udara yang kontak langsung dengan produk steril seperti untuk proses autoclave. Dan non kontak produk, yang digunakan untuk udara yang tidak kontak langsung dengan produk seperti untuk pneumatik.

The compressed air used on PT Etana Biotechnologies Indonesia is divided into 2 type, ie contact product which is used for air which is in direct contact with sterile products such as for autoclave processes. And non direct product is used for air that is not in direct contact with product such as for pneumatics.

5.2. Udara tekan yang digunakan Ingersoll Rand IRN37 OF-A10 dan Atlas Copco ZT37KW terdapat 3 unit dibedakan menjadi Udara Tekan 1, Udara tekan 2 dan Udara tekan 3, dan juga *Refrigerator Dryer* dan *heatless dessicant dryer* terdapat 2 unit dibedakan menjadi *Refrigerator Dryer 1* dan *Refrigerator Dryer 2*, *heatless dessicant dryer 1 dan heatless dessicant dryer 2* dijalankan secara bergantian sesuai jadwal (frekuensi pertukaran penggunaan kedua kompressor dan kedua *refrigerant air dryer* dijalankan bergantian setiap 1 hari sekali) namun untuk *heatless dessicant dryer* digaunakan hanya 1 unit *heatless dessicant atlas copco* sebagai cadangan, terkecuali terdapat kendala pada mesinnya dan hanya menjalankan 1 unit mesinnya saja.

Compressed air used Ingersoll Rand IRN37 OF-A10 and Atlas Copco ZT37KW there are 3 units which are divided into Compressed Air 1, Compressed Air 2 and Compressed Air 3, and also Refrigerator Dryer and heatless dessicant dryer there are 2 units which are divided into Refrigerator Dryer 1 and Refrigerator Dryer 2, heatless dessicant dryer 1 and heatless dessicant dryer 2 and run alternately according to schedule (frequency of exchange of use of both compressors and both refrigerant water dryer is run alternately every 1 day) but heatless dessicant dryer is used only 1, heatless dessicant atlas copco as backup, unless there is a problem with the machine and only runs 1 machine unit.

5.3. Akses user personel pada mesin Compressed air Ingersoll Rand IRN37 OF-A10 unit 1 dan 2, Compressed Air Atlas Copco ZT37KW unit 1, Refrigerator Dryer unit 1 dan 2 dan

Desiccant Dryer unit 1 dan 2 tidak bisa dibuat dikarenakan kapasitas pada program mesin yang tidak mempunyai akses untuk user personel, untuk merubah setingan dan parameter pada mesin bisa dilakukan oleh Supervisor, dan Operator/Teknisi hanya bisa melakukan pemantauan saja dan melaporkan kepada Supervisor jika terjadi penyimpangan pada formulir yang dicatat.

User personnel access to the Compressed air Ingersoll Rand IRN37 OF-A10 units 1 and 2, Compressed Air Atlas Copco ZT37KW Refrigerator Dryer units 1 and 2 and Desiccant Dryer units 1 and 2 cannot be made due to the capacity in the machine program that does not have access for user personnel, to change settings and parameters on the machine. can be done by the Supervisor, and the Operator/Technician can only monitor and report to the Supervisor if there is a deviation in the recorded form.

5.4. Standar spesifikasi kelas udara tekan kontak produk yang digunakan di PT Etana Biotechnologies Indonesia mengacu pada Cleanroom Class Classification ISO 14644:1 untuk kandungan partikel (P), sesuai dengan kelas ruangan pada *Point Of Use* (POU) udara tekan ditempatkan dan ISO 8573-1: 2010 untuk kandungan uap air (W) dan kandungan oli (O). Selengkapnya dapat di lihat pada lampiran No. SOP/EBI/EN-004-L01.

The standard specification of compressed air class used at PT Etana Biotechnologies Indonesia refers to Cleanroom Class Classification ISO 14644: 1 for particle content (P), according to the room class at which point of use (POU) is placed and ISO 8573-1: 2010 for moisture content (W) and oil content (O). More can be seen in attachment No. SOP/EBI/EN-004-L01.

5.5. Klasifikasi udara tekan yang digunakan sesuai POU dapat dilihat pada lampiran No. SOP/EBI/EN-004-L02.

The classification of compressed air used in accordance with POU can be seen in attachment No. SOP/EBI/EN-004-L02.

5.6. Cara pengoperasian harus dengan benar atau sesuai urutan-urutannya dan perawatan harus dilakukan dengan teratur dan sesuai dengan jadwal yang telah dibuat.

The operation method should be correct or accordance to the sequences and maintenance should be carried out regulary and in according to the schedule that has been made.

5.7. Operator/teknisi yang telah terlatih atau sudah mendapatkan pelatihan dan terkualifikasi yang dapat mengoperasikan sistem udara tekan ini.

Trained or qualified operator/technicians who can operate the compressed air system.

5.8. Semua kegiatan perbaikan ataupun perawatan yang dilakukan harus dicatat pada form perawatan berkala terhadap variabel *speed compressor* IR37-OF dan Atlas Copco ZT37KW No. SOP/EBI/EN/-013-F03.

All repair or maintenance activities carried out must be recorded on the form periodic maintenance of variable speed compressor IR37-OF and Atlas Copco ZT37KW No SOP/EBI/EN/-013-F03.

5.9. Keselamatan kerja harus tetap di perhatikan selama mengoperasikan sistem udara tekan ini.
Safety must be kept in mind during the operation of this compressed air system.

5.10. Kegiatan perawatan yang dilakukan secara berkala harus didokumentasikan setelah perawatan dilakukan.
Regular maintenance activities should be documented after maintenance done.

5.11. Semua alat ukur yang digunakan seperti *pressure gauge*, thermometer, voltmeter, ampere meter harus dikalibrasi secara berkala.
All measuring instruments used such as pressure gauge, thermometer, voltmeter, ampere meter must be calibrated periodically.

5.12. Apabila alat ukur tersebut didapati dalam keadaan rusak, harus diberi penandaan yang jelas.
If the measuring device is found to be in a defective state, it should be clearly marked.

5.13. Perlengkapan kerja harus sesuai dengan yang telah ditetapkan yaitu penutup telinga.
Work equipment must be in accordance with what has been determined namely earmuff.

5.14. Penggantian spare part harus sesuai dengan spesifikasi dan fungsinya.
Spare parts replacement must be in accordance with the specifications and functions.

5.15. Untuk perubahan major dan merubah sistem udara tekan harus memakai formulir *change control* dan disetujui oleh seluruh manajer.
For major changes and changing the compressed air system must use a change control form and approved by all managers.

6. ALAT DAN BAHAN
TOOLS AND MATERIAL

6.1. ALAT
TOOLS

6.1.1. Kain lap
Duster

6.1.2. Tang ampere
Clamp meter

6.1.3. Tang
Pliers

6.1.4. Obeng
Screwdriver

6.1.5. Kunci set

Tool Box

6.2. **BAHAN**

MATERIAL

Pelumas / gemuk

Lubricant / grease

7. PROSEDUR

PROCEDURE

7.1. Pengoperasian terhadap Variable Speed Air Compressor IR37-OF dan Atlas Copco ZT37KW.

Operation of Variable Speed Air Compressor IR37-OF and Atlas Copco ZT37KW.

7.1.1. Pastikan katup-katup pada jalur pipa udara tekan telah terbuka.

Ensure the valves on the compressed air pipeline are open.

7.1.2. Pastikan Kompressor dalam keadaan Unloading.

Ensure the Compressor is in an Unloading state.

7.1.3. Cek dan pastikan semua parameter dan indikator pada display sudah sesuai dengan standar.

Check and ensure all parameter and indicator on the display is in accordance with the standard.

7.1.4. Cek pada display jika sudah menampilkan status “Ready To Start”, tekan tombol *Start* (warna hijau) untuk menjalankan Kompressor.

Check on the display if it displays “Ready To Start”, Press the Start Button (green colour) to run the Compressor.

7.1.5. Untuk mematikan Kompressor, lakukan proses Unloading terlebih dahulu dengan cara menekan tombol Unloaded Stop sampai tekanan pada Sump Pressure dibawah 2.9 Bar kemudian tekan tombol Stop (warna merah).

To turn off the Compressor, do the Unloading process first by pressing the Unloaded Stop button until the pressure on Sump Pressure under 2.9 Bar then press Stop button (red colour).

7.1.6. Untuk mematikan Kompressor dalam keadaan darurat, tekan tombol Emergency Stop.

To turn off the Compressor in an emergency, press the Emergency Stop button.

7.2. Pengoperasian terhadap Refrigerant Air Dryer D780IN-A.

Operation of Refrigerant Air Dryer D780IN-A.

7.2.1. Pastikan katup pada jalur masuk dan keluar udara sudah terbuka.
Ensure the valve on the inlet and outlet lines is open.

7.2.2. Nyalakan sistem dengan memutar saklar main power ke posisi On.
Turn on the system by turn the main power switch to On position.

7.2.3. Cek dan pastikan semua parameter dan indikator sudah sesuai dengan standar.
Check and ensure all parameter and indicator is in accordance with the standard.

7.2.4. Nyalakan Dryer dengan menekan tombol Start/Stop (warna merah) satu kali pada panel P&ID. Untuk mematikan tekan satu kali lagi.
Turn on the Dryer by press the Start/Stop button (red colour) once in the P&ID panel. To turn off press once again.

7.3. Pengoperasian terhadap Heatless Desiccant Dryer D500IL dan Atlas Copco Dryer CD 130+ - 70 .
Operation of Heatless Desicant Dryer D500IL and *Atlas Copco Dryer CD 130+ - 70*

7.3.1. Pastikan katup pada jalur masuk dan keluar udara sudah terbuka.
Ensure the valve on the inlet and outlet lines is open.

7.3.2. Nyalakan sistem dengan memutar saklar utama ke posisi I (ON).
Turn on the sistem by turn the main switch to I (ON) position.

7.3.3. Cek dan pastikan semua parameter dan indikator sudah sesuai dengan standar.
Check and ensure all parameter and indicator is in accordance with the standard.

7.3.4. Nyalakan Desiccant dengan menekan tombol nomor 1 (ON) pada panel display Dessicant. Untuk mematikan tekan tombol nomor 7 (OFF).
Turn on the Desiccant by press the number 1 (ON) button in the display panel Desiccant. To turn off press the number 7 (OFF) button.

7.4. Pemantauan harian terhadap sistem udara tekan.
Daily monitoring of compressed air system.

7.4.1. Variable Speed Air Compressor IR37-OF dan instalasinya.
Variable Speed Air Compressor IR37-OF and installation.

7.4.1.1. Cek tekanan *package discharge*, standarnya adalah 7 - 10 bar.
Check the package discharge pressure, the standard is 7-10 bar.

7.4.1.2. Cek tekanan pada *inlet vacuum*, batas waspada ≤ 0,05 bar dan batas tindakan ≤ 0,07 bar.
Check the pressure at the inlet vacuum, the alert limit is ≤ 0.05 bar and the action limit is ≤ 0.07 bar.

7.4.1.3. Cek suhu *1st discharge* 105 - 250°C.
Check 1st discharge temperature 105 - 250°C.

7.4.1.4. Cek tekanan 2nd stage inlet, batas waspada ≤ 3,0 bar dan batas tindakan ≤ 3,2 bar.
Check 2nd stage inlet pressure, alert limit ≤ 3.0 bar and action limit ≤ 3.2 bar

7.4.1.5. Cek tekanan 2nd stage discharge, standarnya adalah 7 – 10 bar.
check the 2nd stage discharge pressure, the default is 7 – 10 bar.

7.4.1.6. Cek suhu 2nd stage discharge 105 - 280°C.
Check the temperature of the 2nd stage discharge 105 - 280°C.

7.4.1.7. Cek tekanan *Oil Filter Drop*, batas waspada ≤ 3,0 bar dan batas tindakan ≤ 3,2 bar.
Check Oil Filter Drop pressure, alert limit ≤ 3.0 bar and action limit ≤ 3.2 bar.

7.4.1.8. Cek level Oli Kompressor, posisi normal Oli adalah terlihat pada sight glass, tambah jika Oli sudah tidak terlihat.
Check the Compressor Oil level, the normal position of the oil is visible on the sight glass, add if the oil is no longer visible.

7.4.1.9. Cek tekanan pada tanki non *contact product*, tekanan normal adalah 7-9 bar.
Check the pressure in the tank non contact product, normal pressure is 7-9 bar.

7.4.1.10. Cek tekanan pada tanki *contact product* , tekanan normal adalah 7-9 bar.
Check the pressure in the tank contact product, normal pressure is 7-9 bar.

7.4.1.11. Catat jam operasional mesin berjalan yang ditampilkan pada display.
Note the operation hours of the running machine displayed on the display.

7.4.1.12. Bersihkan ruangan dan bodi mesin.
Clean the room and machine body.

7.4.2. Variable Speed Air Compressor Atlas Copco ZT37KW dan Instalasinya.
Variable Speed Air Compressor Atlas Copco ZT37KW and Installation.

7.4.2.1. Cek level Oli Kompressor, posisi normal adalah terlihat pada *sight glass,* tambah jika Oli sudah tidak terlihat.
Check the Compressor Oil level, the normal position of the oil is visible on the sight glass, add if the oil is no longer visible

7.4.2.2. Cek tekanan pada tanki *non contact product,* tekanan normal adalah 7-9 bar
Check the pressure in the tank non contact product, normal pressure is 7-9 bar

7.4.2.3. Cek tekanan pada tanki *contact product,* tekanan normal nya adalah 7-9 bar
Check the pressure in the tank contact product, normal pressure is 7-9 bar

7.4.2.4. Cek tekanan oli, normal nya 1,5 – 2,5 bar.
Check oil pressure, normal pressure is 1,5 – 2,5 bar.

7.4.2.5. Cek tekanan *intercooler*, tekanan normal nya adalah 1,8 – 2,6 bar.
Check intercooler pressure, normal pressure is 1,8 – 2,6 bar.

7.4.2.6. Cek *Element 2 outlet temperature* yg ditampilkan pada display, normal *temperature* adalah ≤ 230 ºC
Check Element 2 outlet temperature show on the display, normal temperature is ≤ 230 ºC.

7.4.2.7. Cek *Element 2 inlet temperature* yg ditampilkan pada display, normal *temperature* adalah 30-55 ºC
Check Element 2 inlet temperature show on the display, normal temperature is 30-55 ºC.

7.4.2.8. Cek *Element 1 outlet temperature* yg ditampilkan pada display, normal *temperature* adalah ≤ 230 ºC
Check Element 1 outlet temperature show on the display, normal temperature is ≤ 230 ºC.

7.4.2.9. Cek *Compressor outlet temperature* yg ditampilkan pada display, normal *temperature* adalah 25-40 ºC
Check Compressor outlet temperature show on the display, normal temperature is 25-40 ºC.

7.4.2.10. Cek tekanan *Compressor outlet*, tekanan normal nya adalah 7-10 bar.
Check Compressor outlet, normal pressure is 7 – 10 bar.

7.4.2.11. Catat jam operasional mesin berjalan *yang ditampilkan pada display.*
Note the operation hours of the running machine displayed on the display.

7.4.2.12. Bersihkan ruangan dan bodi mesin.
Clean the room and machine body.

7.4.3. *Refrigerant Air Dryer D780IN-A.*
Refrigerant Air Dryer D780IN-A.

7.4.3.1. Cek *Pressure Dew Point Air Dryer* unit 1 dan 2, standarnya adalah ≤ 4 °C.
Check Pressure Dew Point Air Dryer unit 1 and 2, the standard is ≤ 4°C.

7.4.3.2. Cek Econometer pada Pre Filter FA 800 IG berwarna hijau, Batas wasapada pada area berwarna kuning siapkan *sparepar*tnya untuk melakukan penggantian, jika jarum berada pada area berwarna merah ganti filternya.

Check the Econometer in Pre Filter FA 800 IG green colour, the alert limit in the yellow area, prepare the spare parts for replacement, if the needle is in the red area, replace the filter.

7.4.3.3. Cek Econometer pada After Filter FA 800 IH berwarna biru, Batas waspada pada area berwarna kuning siapkan sparepartnya untuk melakukan penggantian, jika jarum berada pada area berwarna merah ganti filternya.

Check the Econometer on the After Filter FA 800 IH blue colour, the alert limit in the yellow area, prepare the spare parts for replacement, if the needle is in the red area, replace the filter.

7.4.3.4. Cek katup drain otomatis dengan cara ditekan manual pada tombol tes nya, jika berfungsi dengan baik akan mengeluarkan tekanan udaranya.

Check the automatic drain valve by manually pressing the test button, if it works properly it will release the air pressure.

7.4.4. *Heatless Desiccant Dryer Ingersoll Rand D500IL*

Heatless Desiccant Dryer Ingersoll Rand D500IL.

7.4.3.1. Cek *Pressure Dew Point*, standarnya adalah (-65)–(-90)°C, *alert limit -67°C* jika angka sudah mencapai alert limit akan melakukan pemesanan Desiccant Dryernya.

Check Pressure Dew Point, the standard is (-65)–(-90)°C, alert limit -67°C if the number has reached the alert limit, the Desiccant Dryer will be ordered.

7.4.3.2. Cek Econometer After Filter FA 800 IH berwarna biru, Batas waspada pada area berwarna kuning siapkan *sparepart* untuk melakukan penggantian, jika jarum berada pada area berwarna merah ganti filternya. Cek secara visual indikator *blue moisture* pastikan idikator menunjukan warna biru.

Check the Econometer After Filter FA 800 IH blue colour, the alert limit in the yellow area, prepare the spare parts for replacement, if the needle is in the red area, replace the filter. Visually check the blue moisture indicator make sure the idicator shows blue.

7.4.3.3. Cek katup drain otomatis apakah bekerja dengan normal.

Check the automatic drain valve whether it works normally.

7.4.5. *Heatless Desiccant Dryer Atlas Copco CD 130+ -70.*

Heatless Desiccant Dryer Atlas Copco CD 130+ - 70.

7.4.5.1. Cek Pressure Dew Point, standarnya adalah (-65)–(-90)°C, alert limit -67°C jika angka sudah mencapai alert limit akan melakukan pemesanan Desiccant Dryernya

Check Pressure Dew Point, the standard is (-65)–(-90)°C, alert limit -67°C if the number has reached the alert limit, the Desiccant Dryer will be ordered.

7.4.5.2. Cek *pre filter* UD 140 + harus berwarna kuning, batas waspada warna oren dan batas tindakan warna merah.

Check pre filter UD 140 + must be in yellow area, aler limit in orange and action limit red area.

7.4.5.3. Cek *after filter* DDp + *dan* PDP 110 + harus 0 – 290 mbar, batas waspada 300 mbar, batas tindakan *350 mbar.*

Check after filter DDp + and PDP 110 + range 0 – 290 mbar, alert limit 300 mbar, action limit 350 mbar.

7.4.5.4. Cek katup drain otomatis apakah bekerja dengan normal.

Check the automatic drain valve whether it works normally.

7.5. Perawatan berkala 3 bulanan (L2), 6 bulanan (L3), dan 1 tahunan (L4) terhadap sistem udara tekan.

3 months periodic Maintenance (L2), 6 months (L3) , and yearly (L4) of compressed air system.

7.5.1. Variable Speed Air Compressor IR37-OF dan Atlas Copco ZT37KW beserta instalasinya.

Variable Speed Air Compressor IR37-OF and Atlas Copco ZT37KW and their *installation.*

7.5.1.1. Perawatan 3 bulanan (L2).

3 month Maintenance (L2).

a. Periksa semua katup dan instalasi pipa dari kebocoran di area CUB pada pipa Contact product dan Non contact product.

Check all valves and pipe installations for leaks in the CUB area on the Contact product and Non contact product pipes

b. Periksa instalasi pipa dari kebocoran di area mezzanine produksi lantai 1, pada pipa Contact product dan Non contact product.

Check the pipe installation for leaks in the production mezzanine area on the 1st floor, on the Contact product pipe and Non contact product.

c. Periksa instalasi pipa dari kebocoran di area mezzanine produksi lantai 2, pada pipa Contact product dan Non contact product.

Check the pipe installation for leaks in the production mezzanine area on the 2nd floor, on the Contact product pipe and Non contact product.

d. Periksa instalasi pipa dari kebocoran di area mezzanine QC pada pipa Contact product dan Non contact product.
Check the pipe installation for leaks in the QC mezzanine area on the Contact product and Non contact product pipes.

e. Cek perbedaan tekanan pada Separator Element melalui kontrol Intellisys, ganti jika tekanan = 0 atau melebihi 1 bar.
Check the Separator Element differential pressure via the Intellisys, replace if pressure = 0 or exceeds 1 bar.

f. Periksa instalasi dari kebocoran di area mezzanine Animal House pada pipa Contact product dan Non contact product.
Check the installation for leaks in the Animal House mezzanine area on the Contact product and Non contact product pipes.
controllerm change if the pressure = 0 or exceeds 1 bar.

g. Cek Filter udara dan bersihkan, jika sudah kotor atau mampat ganti dengan yang baru.
Check the air filter and clean it, if it is dirty or clogged replace it with a new one.

h. Cek dan bersihkan *Scavenge Screen*.
Check and clean the Scavenge Screen.

i. Cek *Pressure Relief Valve.*
Check Presure Relief Valve.

j. Cek Sensor Udara Temperatur Tinggi, dan tekanan rendah dan tinggi pada elemen
Check High Air Temperature Sensor, and elemen low and high pressure.

k. Cek dan bersihkan *Cooler Cores.*
Check and clean the Cooler Cores.

l. Cek dan bersihkan *Separator Moisture.*
Check and clean the Moisture Separator.

m. Cek dan bersihkan *Motor Cowl.*
Check and clean the Motor Cowl.

n. Cek koneksi kelistrikan seperti MCB, kontaktor dan lainnya, kencangkan jika longgar.
Check electricity connection such as MCB, contactor and others, tighten if loose.

o. Cek kipas pendingin board VSD.

Check cooling fan VSD Board.

7.5.1.2. Perawatan 6 bulanan (L3).

6 month Maintenance (L3).

a. Ganti filter udara setiap 4.000 H.

Change air filter every 4.000 H.

b. Cek dan bersihkan selang-selang setiap 4.000 H.

Check and clean the hoses every 4.000 H.

c. Lumasi Motor Fan dengan greasing setiap 4.000 H.

Lubricate the Fan Motor with greasing every 4.000 H.

7.5.1.3. Perawatan 1 tahunan (L4).

Yearly maintenance (L4).

a. Ganti Oli Coolant setiap 8.000 jam.

Change Coolant Oil every 8.000 hours.

b. Ganti Filter Oli setiap 8.000 jam.

Change Oil Filter every 8.000 hours.

c. Ganti Filter Udara

Change Air Filter

d. Bersihkan *Sparate Element*

e. *Cleaning Sparate Element*

7.5.2. Refrigerant Air Dryer D780IN-A.

Refrigerant Air Dryer D780IN-A.

7.5.2.1. Perawatan 3 bulanan (L2).

3 month maintenance (L2).

a. Bersihkan kondensor dengan menggunakan udara bertekanan.

Clean the condensor by using pressurized air.

b. Bersihkan saluran buangan pipa kondensat.

Clean the condensate pipe drain.

c. Cek arus listrik pada ketiga kawat phasanya.

Check the electric current on the three wire phase.

d. Cek tekanan *refrigerant* di pipa suction saat dryer beroperasi.

Check the refrigerant pressure in the suction pipe when dryer operate.

7.5.2.2. Perawatan 1 tahunan (L4).

Yearly Maintenance (L4).

a. Cek *fan* kondensor.

Check the condensor fan.

b. Ganti Pre Filter Econometer 0,1 Micron FA 800 IG no 1.

Replace both Pre Filter Econometer 0.1 Micron FA 800 IG no 1.

c. Ganti Pre Filter Econometer 0,1 Micron FA 800 IG No 2.

Replace both Pre Filter Econometer 0.1 Micron FA 800 IG no 2.

d. Ganti Econometer After Filter 0,01 Micron FA 800 IH.

Replace Econometer After Filter 0.01 Micron FA 800 IH.

7.5.3. Heatless Desiccant Dryer D500IL dan Atlas Copco Dryer CD 130+ - 70 .

Heatless Desiccant Dryer D500IL and Atlas Copco Dryer CD 130+ - 70 .

7.5.3.1. Perawatan 3 bulanan (L2).

3 month maintenance (L2).

a. Cek pengukur tekanan selama purging terhadap kemungkinan tekanan balik.

Check the pressure gauge during purging against the possibilities of back pressure.

b. Cek arus listrik pada ketiga kawat phasanya.

Check the electric current on the three wire phase.

c. Cek semua katup dari kebocoran dan ganti jika perlu.

Check all the valves from leaks and replace if necessary.

d. Cek semua komponen kelistrikan.

Check all the electricity component.

7.5.3.2. Perawatan 1 tahunan (L4).

Yearly Maintenance (L4).

a. Cek *inlet outlet pilot air control no-loss drain valve*. Ganti jika perlu.

Check the inlet outlet pilot air control no-loss drain valve. Replace if necassary.

b. Ganti Econometer After Filter FA 800 IH No 1.

Replace Econometer After Filter FA 800 IH No 1.

c. Ganti Carbon Filter FA 800 IA.

Replace Carbon Filter FA 800 IA.

d. Ganti Econometer After Filter FA 800 IH No 2.

Replace Econometer After Micron FA 800 IH No 2.

e. Ganti *prefilter* UD 140 +, *after filter* DDP 110+ , PDP110 + dan filter *silencer 3 unit*

Change prefilter UD 140 +, after filter DDP 110+ , PDP110 + and filter silencer 3 unit

f. Cek desiccant dan ganti setiap 3 tahun atau hasil dew point sudah tidak memenuhi syarat yang disebabkan oleh dessicant sudah jenuh.

Check the desiccant and replace every 3 years or the dew point results do not meet the requirements caused by the dessicant is saturated.

8. REFERENSI

REFERENCE

8.1. *Instalation and maintenance manual compressor Ingersoll Rand IR37-OF.*

8.2. *Instalation and maintenance manual Refrigerant Air Dryer D780IN-A.*

8.3. *Instalation and maintenance manual Heatless Desiccant Dryer D500IL.*

8.4. Petunjuk Teknis Sarana Penunjang Kritis Industri Farmasi, Jakata BPOM RI, 2013

8.5. *ISO 14644:1 standar 2015.*

8.6. *ISO 8573-1 standard 2010.*

8.7. *Instalation and maintenance manual compressor Atlas Copco ZT37KW and Atlas Copco Dryer CD 130+ - 70*

9. LAMPIRAN

ATTACHMENT

9.1. Lampiran Klasifikasi Udara Tekan No. SOP/EBI/EN-013-L01E.
Attachment of Compressed Air Classification No. SOP/EBI/EN-013-L01E.

9.2. Lampiran POU danKlasifikasi Udara Tekan No. SOP/EBI/EN-013-L02E.
Attachment of Compressed Air POU and Classification No. SOP/EBI/EN-013-L02E.

9.3. Lampiran P&ID Sistem Udara Tekan No. SOP/EBI/EN-013-L03E.
Attachment of P&ID Compressed Air No. SOP/EBI/EN-013-L03E.

9.4. Logbook Pemantauan Harian Terhadap Sistem Udara Tekan No. SOP/EBI/EN-013-F01E.
Daily Monitoring logbook of Compressed Air System No. SOP/EBI/EN-013-F01E.

9.5. Formulir Perawatan Berkala Terhadap Variabel Speed Compressor IR 37-OF No. SOP/EBI/EN-013-F03E.
Periodic Maintenance of Variable Speed Compresor IR37-OF Form No. SOP/EBI/EN-013-F03E.

9.6. Formulir Perawatan Berkala Terhadap Refrigerant D780IN-A No. SOP/EBI/EN-013-F04E.
Periodic Maintenance of Refrigerant D780IN-A Form No. SOP/EBI/EN-013-F04E.

9.7. Formulir Perawatan Berkala Terhadap Desiccant Dryer D500IL dan Atlas Copco Dryer CD 130+ -70 No. SOP/EBI/EN-013-F05D.
Periodic Maintenance of Desiccant Dryer D500IL and Atlas Copco Dryer CD 130+ -70 Form No. SOP/EBI/EN-013-F05D.

10. RIWAYAT

HISTORY

Tanggal ***Date***	**No. Change Control** ***Change Control No.***	**No. Revisi** ***No. Revision***	**Alasan Perubahan** ***Reason of Change***
29 May 2019	N/A	00	Dokumen baru *New Document*
25 Jan 2021	CC-EBI-EN-001-21	01	1. Menambahkan keterangan pada lampiran POU dan klasifikasi udara tekan mengenai POU yang kontak produk di formulation room (1-60) dan di filling room (1-65) untuk proses CIP dan SIP. *Adding information in the POU attachment and the classification of compressed air regarding the POU that contacts the product in the formulation room (1-60) and in the filling room (1-65) for the CIP and SIP processes.* 2. Menambahkan pemeriksaan kualitas udara tekan setiap 3 bulan sekali. *Added compressed air quality checks every 3 months.* 3. Menambahkan formulir pemerikasaan kualitas udara tekan setiap 3 bulan sekali. *Add a compressed air quality inspection form every 3 months.*

			4. Merubah syarat PDP di desiccant dryer yang semula (-60°C)-(-70°C) menjadi (-65°C)-(-75°C). *Changed the PDP requirements in the desiccant dryer from (-60°C)-(-70°C) to (-65°C)-(-75°C).* 5. Merubah *Classification Compressed Air* yang kontak produk dari PWO menjadi *refer to ISPE.* *Changing the Classification of Compressed Air that contacts the product from PWO to refer to ISPE.*
30 Mar 2022	CC-EBI-EN-002-22	02	1. Revisi poin no 1 (tujuan) yaitu menambahkan Refrigerator Dryer dan Desiccant Dryer agar termasuk pada SOP ini. *Revision point no. 1 (purpose) add Refrigerator Dryer dan Desiccant Dryer to be include in this SOP* 2. Revisi poin 3.3 menambahkan tanggung jawab Project Leader. *Revision point 3.3 addendum responsibility of Project Leader.* 3. Revisi poin 3.4.2 menambahkan membuat tren analisis. *Revision point 3.4.2 addendum create trend analysis.* 4. Menambahkan poin 3.5 menambahkan tanggungjawab QA manajer. *Addendum point 3.5 add responsibility of QA Manager.* 5. Revisi poin no. 5 (petunjuk umum) menambahkan poin no 5.2 yaitu : Udara tekan yang digunakan Ingersoll Rand IRN37 OF-A10 terdapat 2 unit dibedakan menjadi Udara Tekan 1 dan Udara tekan 2, dan juga Refrigerator Dryer terdapat 2 unit dibedakan

			menjadi Refrigerator Dryer 1 dan Refrigerator Dryer 2 dan dijalankan secara bergantian sesuai jadwal (frekuensi pertukaran penggunaan kedua kompressor dan kedua refrigerant air dryer dijalankan bergantian setiap 1 hari sekali), terkecuali terdapat kendala pada mesinnya dan hanya menjalankan 1 unit mesinnya saja. Dan menambahkan point no 5.3 yaitu : Akses user personel pada mesin Compressed air Ingersoll Rand IRN37 OF-A10 unit 1 dan 2, Refrigerator Dryer unit 1 dan 2 dan Desiccant Dryer tidak bisa dibuat dikarenakan kapasitas pada program mesin yang tidak mempunyai akses untuk user personel, untuk merubah setingan dan parameter pada mesin bisa dilakukan oleh Supervisor, dan Operator/Teknisi hanya bisa melakukan pemantauan saja dan melaporkan kepada Supervisor jika terjadi penyimpangan pada formulir yang dicatat. *Revison point no. 5 (General Instruction) add point no 5.2 namely: Compressed air used Ingersoll Rand IRN37 OF-A10 there are 2 units which are divided into Compressed Air 1 and compressed air 2 and also Refrigerator Dryer there are 2 units which are divided into Refrigerator Dryer 1 and Refrigerator Dryer 2 and run alternately according to schedule (frequency of exchange of use of both compressors and both refrigerant water dryer is run alternately every 1 day),unless there is a problem with the machine and only run 1 machine unit. And add point no. 5.3 namely: User personnel access to the Compressed air Ingersoll Rand IRN37 OF-A10 units 1 and 2, Refrigerator Dryer units 1 and 2 and Desiccant Dryer cannot be made due to the capacity in the machine program that does not have access for user personnel, to change settings and parameters on the machine. can be done by the Supervisor, and the Operator/Technician can only monitor*

			and report to the Supervisor if there is a deviation in the recorded form 6. Revisi poin 6.4 (Pemantauan harian terhadap sistem udara tekan) yaitu menambahkan point 6.4.1.2 – 6.4.1.7 tentang pemantauan terhadap: tekanan pada inlet vacuum, suhu 1st discharge, tekanan 2nd stage inlet, tekanan 2nd stage discharge, suhu 2nd stage discharge, dan tekanan oil filter drop. *Revision point no. 6.4 (daily monitoring compressed air system) namely add point 6.4.1.2 – 6.4.1.7 about monitoring : pressure on inlet vacuum, temperature 1st discharge, pressure 2nd stage inlet, pressure 2nd stage discharge, temperature 2nd stage discharge, and pressure oil filter drop.* 7. Revisi poin 6.4 (Pemantauan harian terhadap sistem udara tekan) yaitu menambahkan point 6.4.1.10 – 6.4.1.11 tentang pemantauan terhadap: tekanan pada tangki dan bersihkan ruangan dan bodi mesin. *Revision point no. 6.4 (daily monitoring compressed air system) namely add point 6.4.1.10 – 6.4.1.11 about monitoring pressure on tank and cleaning body and machine area.* 8. Revisi poin 6.4 (Pemantauan harian terhadap sistem udara tekan) yaitu menambahkan point 6.4.2.2 yaitu: Cek Econometer pada Pre Filter 0,1 Micron FA 800 IG, Batas waspada pada area berwarna kuning siapkan sparepartnya untuk melakukan penggantian, jika jarum berada pada area berwarna merah ganti filternya. Dan 6.4.2.3 yaitu: Cek Econometer pada After Filter 0,01 Micron FA 800 IH, Batas waspada pada area berwarna kuning siapkan sparepartnya untuk melakukan penggantian, jika jarum berada pada area berwarna merah ganti filternya. *Revision point 6.4 (daily monitoring compressed air system) namely add point 6.4.2.2 Check the Econometer Pre Filter conditions 0.1 Micron FA 800 IG, the alert limit in the yellow area,*

			prepare the spare parts for replacement, if the needle is in the red area, replace the filter. And 6.4.2.3 Check the Econometer on the After Filter 0.01 Micron FA 800 IH, the alert limit in the yellow area, prepare the spare parts for replacement, if the needle is in the red area, replace the filter. 9. Revisi poin 6.4 (Pemantauan harian terhadap sistem udara tekan) yaitu menambahkan point 6.4.3.2 yaitu: Cek Econometer After Filter 0,01 Micron FA 800 IH, Batas waspada pada area berwarna kuning siapkan sparepartnya untuk melakukan penggantian, jika jarum berada pada area berwarna merah ganti filternya. Check secara visual indicator blue moisture pastikan indicator menunjukan warna biru. *Revision point 6.4 (daily monitoring compressed air system) add point no 6.4.3.2 namely : Check the Econometer After Filter 0.01 Micron FA 800 IH, the alert limit in the yellow area, prepare the spare parts for replacement, if the needle is in the red area, replace the filter. Visually check the blue moisture indicator make sure the idicator shows blue.* 10. Menambahkan poin 6.6 tentang kualifikasi dan verifikasi rutin *Add point 6.6 qualification and routine verification.*
06 Mar 2023	CC-EBI-EN-011-22	03	1. Menghapus poin 3.2.4 Mengadakan review bulanan terhadap hasil kerja operator Utility. *Delete point 3.2.4 Perform a monthly review of the workings of the Utility operator* 2. Menghapus poin 3.2.5 Memberikan training kepada departemen lain yang terkait *Delete point 3.2.5 Provide training to others department which related.* 3. Menambahkan nomor form Riwayat perbaikan mesin pada poin no 5.8. *Add number form of machine history card on point no 5.8*

			4. Menambahkan perlengkapan kerja yang harus di pakai yaitu earmuff pada poin 5.13 *Addendum earmuff as a safety equipment on point 5.13.* 5. Menghapus poin 3.2.6, 3.4.2, 5.16, 5.17, dan 5.18 karena tidak relevan dengan SOP pengoperasian dan perawatan mesin ini. *Delete point 3.2.6, 3.4.2, 5.16, 5.17, and 5.18 because the points does not relevan to this operating and maintenance machine SOP.* 6. Revisi poin 6.5.1.1 yaitu mengukur tingkat kebisingan pada mesin compressed air system. *Revision point no. 6.5.1.1 noise level measurement on machine of compressed air system.* 7. Revisi poin 6.5.2.1 bersihkan kondensor dengan menggunakan udara bertekanan. *Revision point no. 6.5.2.1 cleaning condensor unit use compressed air.* 8. Menambahkan POU kontak produk di ruangan 2-9 (purification), 2-7 (encapsulation), 2-7a (storage room), 1-39 (formulation 2), 1-29 (Filling room 2) dan POU non kontak produk pada ruangan 1-22 (packaging), 1-76 (gowning on C), dan 1-44 (material air lock). *Addendum POU contack product room 2-9 (purification), 2-7 (encapsulation), 2-7a (storage room), 1-39 (formulation 2), 1-29 (Filling room 2) and POU non contact produk in the room 1-22 (packaging), 1-76 (gowning on C), and 1-44 (material air lock).*
	CC-EBI-OT-005-22	04	1. Menambahkan sistem udara tekan Atlas Copco ZT37KW kedalam poin 1.1, 5.2, 5.3, 5.8, 7.1, dan 8.7. *Add the Atlas Copco ZT37KW compressed air system to points 1.1, 5.2, 5.3, 5.8, 7.1, and 8.7.* 2. Menambahkan Atlas Copco Dryer CD 130+ - 70 pada poin 1, 7.3. dan 7.5.3. *Add the atlas Copco Dryer CD 130+ - 70 to points 1, 7.3, 7.4.3. and 7.5.3.*

			3. Merevisi lampiran SOP/EBI/EN-013-L03C dengan melakukan update layout P&ID terbaru. *Revise the SOP/EBI/EN-013-L03C attachment by updating the latest P&ID layout.* 4. Merevisi poin 7.4.1.7 yg sebelum nya batas waspada <1,2 bar dan batas Tindakan <1,4 bar menjadi batas waspada < 3,0 bar dan batas Tindakan < 3,2 bar. *Revise point 7.4.1.7 which previously had an alert limit of <1.2 bar and an action limit of <1.4 bar to an alert limit of <3.0 bar and an action limit of <3.2 bar.* 5. Menghilangkan poin 7.4.1.9 cek katup drain otomatis dengan cara ditekan manual pada tombol testnya, jika berfungsi dengan baik akan mengeluarkan tekanan udaranya. *Check the automatic drain valve by manually pressing the test button, if it works properly it will release the air pressure.* 6. Menambahkan prosedur pada poin 7.4.1.9 untuk cek tekanan pada tanki *non contact product,* tekanan normalnya adalah 7-9 bar. *Add procedure in point* 7.4.1.9. *to check the pressure in the tank non contact product, normal pressure is 7-9 bar.* 7. Menambahkan prosedur di poin 7.4.1.10. untuk cek tekanan pada tanki *contact product,* tekanan normalnya adalah 7-9 bar. *Add procedure in point* 7.4.1.10. *to check the pressure in the tank contact product, normal pressure is 7-9 bar.* 8. Menambahkan prosedur di poin 7.4.1.11 untuk catat jam operasional mesin berjalan yang di tampilkan pada display. *Add procedure in point 7.4.1.11 for note the operation hours of the running machine displayed on the display.* 9. Menambahkan prosedur di poin 7.4.2 tentang Variable Speed Air Compressor Atlas Copco ZT37KW dan Instalasi nya.

			Add procedure in point 7.4.2 about Variable Speed Air Compressor Atlas Copco ZT37KW and installation. 10. Menghilangkan prosedur di poin 7.5.1.1. tentang periksa instalasi dari kebocoran di area mezzanine Animal House pada pipa Contact product dan Non Contact Product. *Delete procedure in point 7.5.1.1 about check the installation for leaks in the Animal house mezzanine area on the contact product and non contact product.* 11. Poin 7.5.1.2. Menambahkan *running hours* selama 8.000 s/d 16.000 H pada pergantian filter coolant. *Point 7.5.1.2. add running hours for 8,000 to 16,000 H on coolant filter replacement..* 12. Poin 7.5.1.2 menambahkan *running hours* setiap 4.000 H pada pergantian filter udara. Poin 7.5.1.2. add running hours every 4.000 H for replacement air filter. 13. Poin 7.5.1.2. menambahkan *running hours setiap* 8.000 H untuk cek dan bersihkan selang-selang. *Point 7.5.1.2. add running hours every 8.000 H for check and cleaning the hoses.* 14. Poin 7.5.1.2. menambahkan *running hours* setiap 4.000 H untuk lumasi motor fan dengan greasing. *Point 7.5.1.2. add running hours every 4.000 H for lubricate the fan motor with greasing.* *15.* Menghilangkan poin b, c dan d pada poin 7.5.3.2 dikarenakan sudah tidak relevan, *Delete point b, c and d in point 7.5.3.2. because it is not longer relevant.* 16. Menambahkan referensi tentang *installation and maintenance manual compressor Atlas Copco ZT37KW and* Atlas Copco Dryer CD 130+ - 70 *Added references regarding installation and maintenance manual compressor Atlas Copco ZT37KW and Atlas Copco Dryer CD 130+ - 70* 17. Menghapus lampiran no 9.5 tentang Logbook Pemantauan Harian

			Terhadap Refrigerator Dryer dan Desiccant Dryer No. SOP/EBI/EN-013-F02. *Delete attachment no 9.5 about Daily Monitoring Logbook of Refrigerator Dryer and Desiccant Dryer no SOP/EBI/EN-013-F02.* 18. Menghilangkan poin 7.6 tentang kualifikasi dan verifikasi rutin dikarenakan bukan termasuk dari *scope engineering.* *Delete point 7.6 regarding qualifications and routine verification because it is not included in the scope of engineering.* 19. Menambahkan kolom Riwayat pada lampiran SOP/EBI/EN-013-L02. *Add a History column to the SOP/EBI/EN-013-L02 attachment.* 20. Merevisi daftar POU dan Klasifikasi Udara tekan pada lampiran SOP/EBI/EN-013-L02 yang telah di sesuaikan daftar nya dengan lampiran P&ID system Udara Tekan dengan menambahkan layout dengan nomor drawing DWG-EBI-EN-PRD.1&2-MG-AD-0201 Rev.01 *Revise the POU list and compressed air classification in the SOP/EBI/EN-013-L02 attachment which has been adjusted to the P&ID compressed air system attachment by adding a layout with drawing number DWG-EBI-EN-PRD.1&2-MG-AD-0201 Rev. 01* 21. Merevisi lampiran P&ID system Udara Tekan dengan menambahkan layout dengan nomor drawing DWG-EBI-EN-PRD.1&2-MG-AD-0201 Rev.01 *Revise the Compressed Air system P&ID attachment by adding a layout with drawing number DWG-EBI-EN-PRD.1&2-MG-AD-0201 Rev.01* 22. Merevisi Pemantauan Harian Terhadap Kompressor untuk menambahkan Atlas Copco ZT37KW (Compressor 3), Refrigerated Air Dryer, Desiccant Dryer Ingersoll Rand dan Desiccant Dryer Atlas Copco Dryer CD 130+ pada kolom checklist item. *Revised Daily Monitoring of Compressors to add Atlas Copco*

			ZT37KW (Compressor 3), Refrigerated Air Dryer, Ingersoll Rand Desiccant Dryer and Atlas Copco Dryer CD 130+ Desiccant Dryer in the checklist item column. 23. Menghilangkan *component* tentang Condition pipe in the mezzanine Animal House, Cleaning Scavenge Screen and Compressor Vibrating Analysis pada formulir no. SOP/EBI/EN-013-F03 tentang Perawatan Berkala Terhadap Variable Speed Compressor 1,2&3 *Delete components regarding Condition pipe in the mezzanine Animal House, Cleaning Scavenge Screen and Compressor Vibrating Analysis for form no* SOP/EBI/EN-013-F03 *about Periodic Maintenance of Variable Speed Compressor 1,2 & 3* 24. Menambahkan running hours pada Perawatan mesin level L3 di formulir no. SOP/EBI/EN-013-F03 tentang Perawatan Berkala Terhadap Variable Speed Compressor 1,2&3 *Add running hours for maintenance machine L3 level form no SOP/EBI/EN-013-F03 about Periodic Maintenance of Variable Speed Compressor 1,2 & 3* 25. Menambahkan prosedur untuk pergantian filter oli, pergantian filter udara dan pembersihan sparate element pada perawatan mesin L4 di formulir no. SOP/EBI/EN-013-F03 tentang Perawatan Berkala Terhadap Variable Speed Compressor 1,2&3 *Added procedures for changing oil filters, changing air filters and cleaning spare elements to L4 engine maintenance in form no. SOP/EBI/EN-013-F03D about Periodic Maintenance of Variable Speed Compressor 1,2 & 3* 26. Merevisi judul formulir no SOP/EBI/EN-013-F05 menjadi Perawatan Berkala Terhadap Desiccant Dryer D500IL dan Atlas Copco Dryer CD 130+ -70 *Revise form title no SOP/EBI/EN-013-F05 Periodic Maintenance of Desiccant Dryer D500IL and Atlas Copco Dryer CD 130+ -70*

			27. Menghilangkan component tentang Replace after filter FA800IH (No1), Replace Carbon Filter FA800IA dan Replace After Filter FA800IH (No2) dikarenakan sudah tidak relevan *Delete components about Replace after filter FA800IH (No1), Replace Carbon Filter FA800IA and Replace After Filter FA800IH (No2) because they are no longer relevant.* 28. Menghilangkan project leader pada poin nomor 3.3. dan kolom approval dikarenakan pada tanggal 1 januari 2024 Project leader sudah tidak membawahi departemen engineering. Eliminate the project leader in point number 3.3. and the approval column is because on January 1 2024 the Project Leader will no longer be in charge of the engineering department. 29. Merubah parameter pada *Pressure Dew Point* yang dimana sebelumnya adalah (-65)–(-85)°C menjadi (-65)–(-90)°C dikarenakan *Molecular sieve* telah dilakukan pergantian sehingga nilai Pressure Dew Point menjadi lebih baik. *Changing the parameters on the Pressure Dew Point which previously was (-65)–(-85)°C to (-65)–(-90)°C because the Molecular sieve D500IL has been changed so that the Pressure Dew Point value is better.*

11. DISTRIBUSI

DISTRIBUTION

11.1. Departemen Pemastian Mutu

Quality Assurance Department

11.2. Departemen Pengawasan Mutu

Quality Control Department

11.3. Departemen Produksi

Production Department

11.4. Departemen Engineering

Engineering Department

Compressed Air Quality Classification ISO 8573.1 : 2010 and ISPE

No.	Parameter	Acceptance Criteria
1	Dew Point	-40°C
2	Oil Content	≤0.5 mg/m^3
3	Limits of Microbial Contamination	Class B : < 10 cfu/m^3 Class C : < 100 cfu/m^3 Class D : < 200 cfu/m^3 Class CNC : Not defined
4	Particle	

Class	≥0.5 µm	≥5 µm
B	3.520	29
C	352.000	2.900
D	3.520.000	29.000
CNC	Not defined	Not defined

Cleanroom Class Classification ISO 14644:1

Kondisi Istirahat		**Kondisi Operasi**	
At rest		***In operation***	
Jumlah partikel yang diperbolehkan per m³			
Number of particles allowed per m³			
≥ 0.5µm	**≥ 5µm**	**≥ 0.5µm**	**≥ 5µm**
3520	20	3520	20
3520	29	352000	2900
352000	2900	3520000	29000
3520000	29000	*not defined*	*not defined*
3520000	29000	*not defined*	*not defined*

etana Biotech PT ETANA BIOTECHNOLOGIES INDONESIA	LAMPIRAN / *ATTACHMENT* **POU DAN KLASIFIKASI UDARA TEKAN** ***COMPRESSED AIR POU AND CLASSIFICATION***	Document No. : SOP/EBI/EN-013-L02E Effective Date :

No	Building Name	Room No	Room Name	Machine Name	Compressed Air Product Contact		Compressed Air Non Product Contact	
					Code	Classification	Code	Classification
1.	Production 1st Floor	1-1	Clean Utility	WFI System	N/A	N/A	C.A NCP 1-1-1	not defined
2.	Production 1st Floor	1-2	Clean Utility	Plant Steam	N/A	N/A	C.A NCP 1-1-2	not defined
.3.	Production 1st Floor	1-3	Clean Utility	Drain	N/A	N/A	C.A NCP 1-1-3	not defined
4.	Production 1st Floor	1-4	Clean Utility	Brine Tank	N/A	N/A	C.A NCP 1-1-4	not defined
5.	Production 1st Floor	1-5	Clean Utility	Distribution	N/A	N/A	C.A NCP 1-1-5	not defined
6.	Production 1st Floor	1-6	Clean Utility	Media	N/A	N/A	C.A NCP 1-1-6	not defined
7.	Production 1st Floor	1-22	Packaging		N/A	N/A	C.A NCP 1-22-1	not defined
8.	Production 1st Floor	1-22	Packaging		N/A	N/A	C.A NCP 1-22-2	not defined
11.	Production 1st Floor	1-28	Visual Inspection		N/A	N/A	C.A NCP-1-28-1	not defined
13.	Production 1st Floor	1-29	Filling Room 2	Filling Tofflon	C.A CP-1-29-1	Refers to table ISPE (Attachment L01D)	N/A	not defined
14.	Production 1st Floor	1-29	Filling Room 2	Filling Tofflon	C.A CP-1-29-2	Refers to table ISPE (Attachment L01D)	N/A	not defined
15.	Production 1st Floor	1-29	Filling Room 2	Filling Tofflon	C.A CP-1-29-3	Refers to table ISPE (Attachment L01D)	N/A	not defined
16.	Production 1st Floor	1-29	Filling Room 2	Filling Tofflon	C.A CP-1-29-4	Refers to table ISPE (Attachment L01D)	N/A	not defined
17.	Production 1st Floor	1-39	Formulation 2		C.A CP -1-39-1	Refers to table ISPE (Attachment L01D)	N/A	
18.	Production 1st Floor	1-56	Washing & Sterilization	Mixing	C.A CP-1-56-1	Refers to table ISPE (Attachment L01D)	N/A	not defined
20.	Production 1st Floor	1-56	Washing & Sterilization	Autoclave	C.A CP-1-56-2	N/A	C.A NCP-1-56-1	not defined
21.	Production 1st Floor	1-60	Formulation 1		C.A CP-1-60-1	Refers to table ISPE (Attachment L01D)	N/A	not defined
23.	Production 1st Floor	1-64	A/L		N/A	N/A	C.A NCP-1-64-1	not defined
24.	Production 1st Floor	1-65	Filling Room		C.A CP-1-65-1	Refers to table ISPE (Attachment L01D)	N/A	not defined
25.	Production 1st Floor	1-66	Filling Room		N/A	N/A	C.A NCP-1-65-1	not defined
26.	Production 1st Floor	1-66	Filling Room		N/A	N/A	C.A NCP-1-65-2	not defined
	Production 1st Floor	1-76	Gowning On C		N/A	N/A	C.A NCP-1-76-1	not defined
	Production 1st Floor	1-82	Gowning D Room		N/A	N/A	C.A NCP-1-82-1	not defined
1.	Production 2nd Floor	2-7	Encapsulation		C.A CP-2-7-1	Refers to table ISPE (Attachment L01D)	N/A	not defined
2.	Production 2nd Floor	2-7	Encapsulation		C.A CP-2-7-2	Refers to table ISPE (Attachment L01D)	N/A	not defined
2.	Production 2nd Floor	2-7	Encapsulation		C.A CP-2-7-3	Refers to table ISPE (Attachment L01D)	N/A	not defined
3.	Production 2nd Floor	2-7a	Mix Encapsulation		C.A CP-2-7a-1	Refers to table ISPE (Attachment L01D)	N/A	not defined
4.	Production 2nd Floor	2-7a	Mix Encapsulation		C.A CP-2-7a-2	Refers to table ISPE (Attachment L01D)	N/A	not defined
5.	Production 2nd Floor	2-9	Purification		C.A CP-2-9-1	Refers to table ISPE (Attachment L01D)	N/A	not defined
6.	Production 2nd Floor	2-19	Harvest Filtration		C.A CP-2-19-1	Refers to table ISPE (Attachment L01D)	N/A	not defined
7.	Production 2nd Floor	2-29	Media Filter		C.A CP-2-29-1	Refers to table ISPE (Attachment L01D)	N/A	not defined
8.	Production 2nd Floor	2-48	Laundry	Clothes Autoclave	C.A CP-2-48-1	Refers to table ISPE (Attachment L01D)	N/A	not defined
9.	Production 2nd Floor	2-60	Second Washer		C.A CP-2-60-1	Refers to table ISPE (Attachment L01D)	N/A	not defined
10.	Production 2nd Floor	2-61	Final Sterilization	Dry Heat Sterilizer	C.A CP-2-61-1	Refers to table ISPE (Attachment L01D)	N/A	not defined
11.	Production 2nd Floor	2-61	Final Sterilization	Autoclave	C.A CP-2-61-2	Refers to table ISPE (Attachment L01D)	N/A	not defined
12.	Production 2nd Floor	2-4	Grade C Corridor		N/A	N/A	C.A NCP-2-4-1	not defined
13.	Production 2nd Floor	2-17	Grade C Corridor		N/A	N/A	C.A NCP-2-17-1	not defined

No	Building Name	Room No	Room Name	Machine Name	Compressed Air Product Contact		Compressed Air Non Product Contact	
					Code	Classification	Code	Classification
1.	Quality Control	Q-28	Micro Preparation	Autoclave	C.A CP-Q-28-1	Refers to table ISPE (Attachment L01D)		not defined
	Quality Control	Q-28	Micro Preparation	Autoclave	N/A	N/A	C.A NCP-Q-28-1	not defined
2.	Quality Control	Q-21	Instrument	GC	N/A	N/A	C.A NCP-Q-21-1	not defined
3.	Quality Control	A-51	Corridor C	For Fumigation	N/A	N/A	C.A NCP-Q-51-1	not defined
1.	CUB	CUB	Terace	General Purpose	N/A	N/A	C.A NCP-CUB-1	not defined
2.	CUB	CUB	Compressed Air Room	Sampling Point	C.A CP-CUB-1	Refers to table ISPE (Attachment L01D)	N/A	not defined
1.	WWTP	N/A	WWTP	Filter Press	N/A	N/A	WWTP	not defined

2. Riwayat
History

Tanggal *Date*	**No. Change Control** *Change Control No.*	**No. Revisi** *No. Revision*	**Alasan Perubahan** *Reason of Change*
		00	

Prepare by: Checked by : Approved by :

Eng. Staff | Eng. Supervisor | Eng. Manager | QA. Manager

etana Biotech PT ETANA BIOTECHNOLOGIES INDONESIA	LAMPIRAN / ATTACHMENT **P&ID SISTEM UDARA TEKAN COMPRESSED AIR** ***P&ID COMPRESSOR AIR SYSTEM***	Document No. : SOP/EBI/EN-013-L03E Effective Date :

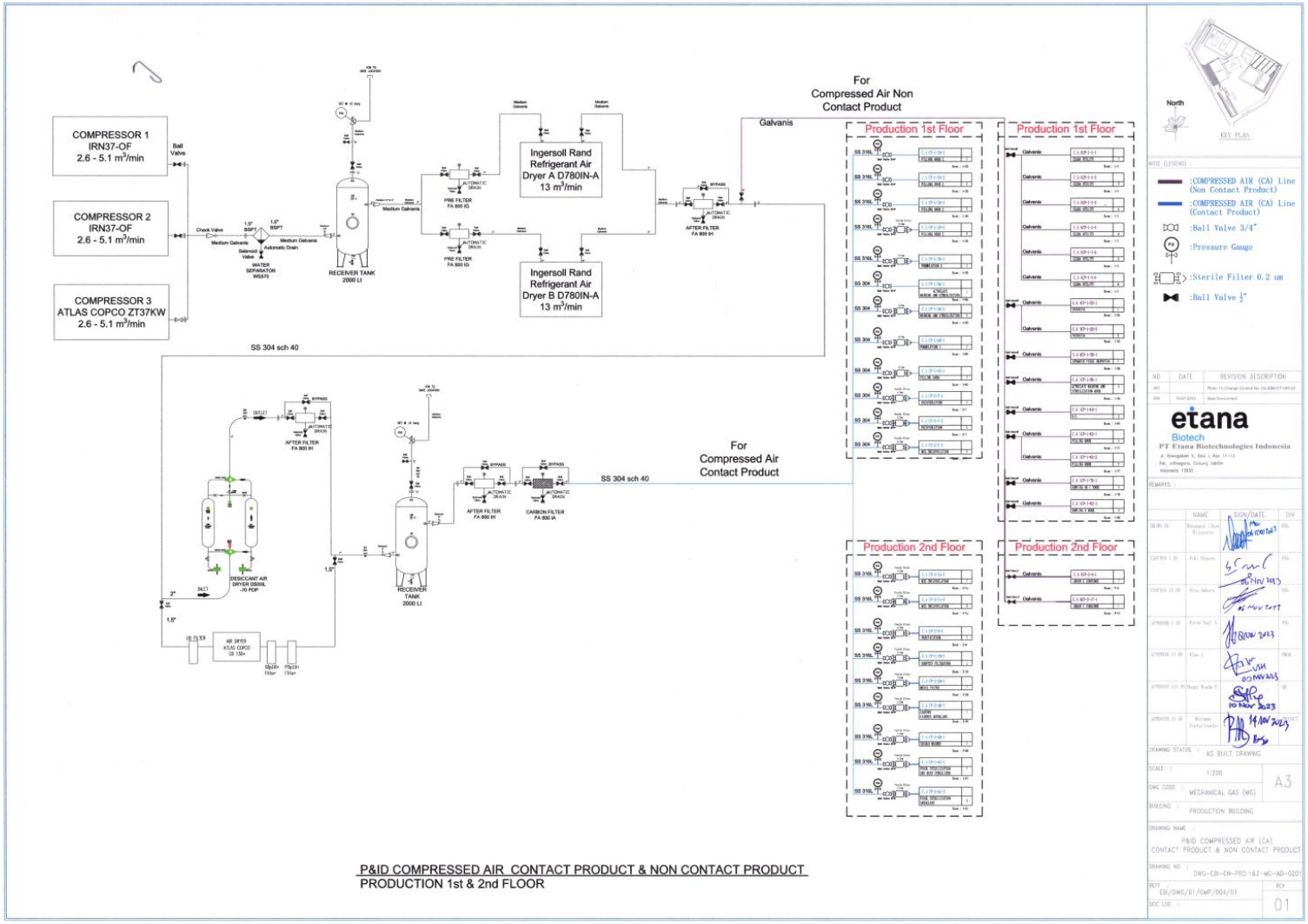

etana Biotech PT ETANA BIOTECHNOLOGIES INDONESIA	LOGBOOK / *LOGBOOK* **PEMANTAUAN HARIAN TERHADAP SISTEM UDARA TEKAN** ***DAILY MONITORING OF COMPRESSED AIR SYSTEM***	Document No. : SOP/EBI/EN-013-F01E Effective Date :

No	Checklist Items	Standard	Time : (Shift 1, Shift 2 dan Shift 3)			Remark
		Value	08:30	16:30	01:30	
I	**Ingersoll Rand IRN37 OF-A10 (Compressor 1)**					
1	Package Discharge Pressure	7-10 Bar				
2	Inlet Vacuum	≤ 0,05 Bar				
3	1st Stage Discharge Temperature	105 - 250 °C				
4	2nd Stage Inlet Pressure	≤ 3,0 Bar				
5	2nd Stage Discharge Pressure	7-10 Bar				
6	2nd Stage Discharge Temperature	105 - 280 °C				
7	Oil Filter Pressure Drop	≤ 3,0 Bar				
8	Oil Coolant Level when Operate	Seen on Sightglass				
9	Pressure in the tank Non Contact Product	7-9 Bar				
10	Pressure in the tank Contact Product	7-9 Bar				
11	Running Hour	Information only				
II	**Ingersoll Rand IRN37 OF-A10 (Compressor 2)**					
1	Package Discharge Pressure	7-10 Bar				
2	Inlet Vacuum	≤ 0,05 Bar				
3	1st Stage Discharge Temperature	105 - 250 °C				
4	2nd Stage Inlet Pressure	≤ 3,0 Bar				
5	2nd Stage Discharge Pressure	7-10 Bar				
6	2nd Stage Discharge Temperature	105 - 280 °C				
7	Oil Filter Pressure Drop	≤ 3,0 Bar				
8	Oil Coolant Level when Operate	Seen on Sightglass				
9	Pressure in the tank Non Contact Product	7-9 Bar				
10	Pressure in the tank Contact Product	7-9 Bar				
11	Running Hour	Information only				
III	**Atlas Copco ZT37KW (Compressor 3)**					
1	Oil Coolant Level when Operate	Seen on Sightglass				
2	Pressure in the tank Non Contact Product	7-9 Bar				
3	Pressure in the tank Contact Product	7-9 Bar				
4	Oil pressure	1,5 - 2,5 Bar				
5	Intercooler pressure	1,8 - 2,6 Bar				
6	Element 2 outlet temperature	< 230 °C				
7	Element 2 inlet temperature	30 - 55 °C				
8	Element 1 outlet temperature	< 230 °C				
9	Compressor outlet temperature	25 - 40 °C				
10	Compressor outlet pressure	7-10 Bar				
11	Running Hour	Information only				
IV	**Refrigerated Air Dryer**					
1	PDP Refrigerant Air Dryer Unit 1	≤ 4 °C				
2	Pre Filter Econometer Before 1	Green				
3	PDP Refrigerant Air Dryer Unit 2	≤ 4 °C				
4	Pre Filter Econometer Before 2	Green				
5	Filter Econometer After	Blue				
6	Test Auto Drain Valve Function	Normal				
V	**Dessicant Dryer Ingersoll rand**					
1	PDP Desiccant Dryer	(-65) - (-90) °C				
2	After Filter Econometer (After Desiccant)	Blue				
3	Auto Drain Valve Function	Normal				
III	**Dessicant Dryer Atlas Copco Dryer CD 130+**					
1	PDP Desiccant Dryer	(-65) - (-90) °C				
2	Prefilter UD 140+	Yellow				
3	After Filter DDP 110+ dan PDP 110+ (After Desiccant)	< 350 mbar				
4	Auto Drain Valve Function	Normal				

Note :	Operator :	Chceked By :
1 *Inlet Vacuum, Alert limit ≥ 0,05 Bar and action limit ≥ 0,07 Bar* 2 *2nd stage inlet pressure, alaert limit, ≥ 3,0 Bar and action limit ≥ 3,2 Bar* 3 *Oil filter pressure drop, alert limit ≥ 1,2 Bar and action limit ≥ 1,4 Bar* 4 *Pre filter econometer before, alert limit in yellow area, action limit red area* 5 *Filter econometer after, alert limit in yellow area, action limit red area* 6 *After filter econometer (after desiccant), alert limit 1,2 bar action limit 2 bar* 7 *For PDP Desiccant dryer alert liit -67 °C* 8 *Pre filter dryer atlas before, alert limit in Orange area, action limit red area* 9 *After filter dryer atlas, alert limit in 300 mbar action limit 350 mbar.*	Shift 1 Shift 2 Shift 3 ( ) ( ) ( )	( )

etana Biotech **PT ETANA BIOTECHNOLOGIES INDONESIA**	**FORMULIR / *FORM*** **PERAWATAN BERKALA TERHADAP VARIABLE SPEED COMPRESSOR 1, 2 & 3** ***PERIODIC MAINTANCE OF VARIABLE SPEED COMPRESSOR 1,2 & 3***	Document No. : SOP/EBI/EN-013-F03E Effective Date :

Level	:
Month	:
Date	:
Day	:
Hours Meter	:

Level	Component	Activity							Condition		Remark
		C	I	L	R	S	T	W	B	G	
L2											
	Condition valve and pipe CUB										
	Condition pipe in the mezzanine Prod. 1st floor										
	Condition pipe in the mezzanine Prod. 2nd floor										
	Condition pipe in the mezzanine QC										
	Differential separator element										
	Air Filter										
	Cleaning scavenge screen										
	Cleaning pressure relief valve										
	High air temperature sensor / 2 element CP & HP										
	Cleaning cooler cores										
	Cleaning seperator moisture										
	Cleaning motor cowl										
	Connection MCB, contactor and others										
	Cooling FAN VSD board menggunakan vacuum										
L3											
	Change air filter / 4.000 H										
	Cleaning hoses / 4.000 H										
	Lubricate the FAN motor / Greasing 4.000 H motor main										
L4											
	Change coolant oil										
	Change filter oil										
	Change filter udara										
	Cleaning sparate element										

Note :

No	Date	Start	Finish	Duration		Total personnel	Area	Remark
				Hour	Minute			

etana Biotech **PT ETANA BIOTECHNOLOGIES INDONESIA**	**FORMULIR / *FORM*** **PERAWATAN BERKALA TERHADAP VARIABLE SPEED COMPRESSOR 1, 2 & 3** ***PERIODIC MAINTANCE OF VARIABLE SPEED COMPRESSOR 1,2 & 3***	Document No. : SOP/EBI/EN-013-F03E Effective Date :

Remark : C : Cleaning (pembersihan) I : Inspection (pemeriksaan) L : Lubrication (pelumasan) R : Replacement (penggantian) S : Setting (penyetelan) T : Tightened (dikencangkan) W : Welding (pengelasan) G : Good (baik) B : Bad (jelek) PM 4.000 H : 1. Change Air Filter 2. Change Oil Filter 3. Change Breather Filter 4. Change Check Valve Intercooler PM 8.000 H : 1. 4.000 + Change mekanikal valve oil dan cleaning cooler	Level : L2 : Every 3 month L3 : Every 6 month L4 : Every1 year	Done by : ( )	Checked by : ( )

etana Biotech **PT ETANA BIOTECHNOLOGIES INDONESIA**	**FORMULIR / *FORM*** **PERAWATAN BERKALA TERHADAP REFRIGERANT D780IN-A** ***PERIODIC MAINTENANCE OF REFRIGERANT D780IN-A***	Document No. : SOP/EBI/EN-013-F04E Effective Date :

Level :
Month :
Date :
Day :
Hours Meter :

Level	Component	Activity							Condition		Remark
		C	I	L	R	S	T	W	B	G	
L2											
	Cleaning condensor										
	Cleaning condensate										
	Electric current										
	Refrigerator pressure when dryer operate										
L4											
	Condensor FAN										
	Replace pre filter FA800IG no1										
	Replace pre filter FA800IG no2										
	Replace after filter FA800IH										

Note :

No	Date	Start	Finish	Duration		Total personnel	Area	Remark
				Hour	Minute			

Remark : C : Cleaning (pembersihan) I : Inspection (pemeriksaan) L : Lubrication (pelumasan) R : Replacement (penggantian) S : Setting (penyetelan) T : Tightened (dikencangkan) W : Welding (pengelasan) G : Good (baik) B : Bad (jelek)	Level : L2 : Every 3 month L4 : Every1 year	Done by : ( )	Checked by : ( )

etana Biotech **PT ETANA BIOTECHNOLOGIES INDONESIA**	**FORMULIR / *FORM*** **PERAWATAN BERKALA TERHADAP DESICCANT DRYER D500IL DAN ATLAS COPCO DRYER CD 130+ -70** ***PERIODIC MAINTENANCE OF DESICCANT DRYER D500IL AND* ATLAS COPCO DRYER CD 130+ -70**	Document No. : SOP/EBI/EN-013-F05D Effective Date :

Level	:
Month	:
Date	:
Day	:
Hours Meter	:

Level	Component	Activity							Condition		Remark
		C	I	L	R	S	T	W	B	G	
L2											
	Pressure gauge during purging										
	Electric current										
	Valve from leaks										
	Electricity component										
L4											
	Inlet outlet pilot air control no-loss drain valve										
	Replace after filter FA800IH (No 1)										
	Replace carbon filter FA800IA										
	Replace after filter FA800IH (No 2)										
	Replace prefilter UD 140 +, After filter DDp110+, PDP 110 + and filter silencer 3 units										
	Check desiccant and replace every 5 years										

Note :

No	Date	Start	Finish	Duration		Total personnel	Area	Remark
				Hour	Minute			

etana Biotech **PT ETANA BIOTECHNOLOGIES INDONESIA**	**FORMULIR / *FORM*** **PERAWATAN BERKALA TERHADAP DESICCANT DRYER D500IL DAN ATLAS COPCO DRYER CD 130+ -70** ***PERIODIC MAINTENANCE OF DESICCANT DRYER D500IL AND* ATLAS COPCO DRYER CD 130+ -70**	Document No. : SOP/EBI/EN-013-F05D Effective Date :

Remark : C : Cleaning (pembersihan) I : Inspection (pemeriksaan) L : Lubrication (pelumasan) R : Replacement (penggantian) S : Setting (penyetelan) T : Tightened (dikencangkan) W : Welding (pengelasan) G : Good (baik) B : Bad (jelek) PM 4.000 H : 1. Change filter silence 3pcs 2. Change filter DD/PD + UD PM ± 48.000 H : 1. Change Desiccant	Level : L2 : Every 3 month L4 : Every1 year	Done by : ( )	Checked by : ( )